121-198
~~FARA 25-66, 121-~~
see 121-19

DEPARTMENT OF TRANSPORTATION

Federal Aviation Administration

14 CFR Parts 25 and 121

[Docket No. 24594; Amendment Nos. 25-66 and 121-198]

RIN: 2120-AB23

Improved Flammability Standards for Materials Used in the Interiors of Transport Category Airplane Cabins

AGENCY: Federal Aviation Administration (FAA), DOT.

ACTION: Final rule; Findings concerning additional comments.

SUMMARY: These amendments upgrade the fire safety standards for cabin interior materials in transport category airplanes by establishing refined fire test procedures and apparatus and a new requirement for smoke emission testing. The refined test procedures and apparatus are the result of additional research and fire testing and are intended to improve the reproducibility of test results. The refinement for smoke emission testing is intended to minimize the possibility that emergency egress will be hampered by smoke obscuration. In addition, the operating rules for air carrier (Part 121) and air taxi (Part 135) operators, which were adopted in the original final rule, are amended to enable additional compliance time to be granted for the few interior components for which timely compliance cannot be achieved.

The FAA findings concerning the requested additional comments on the final flammability criteria are also presented.

EFFECTIVE DATE: September 26, 1988.

FOR FURTHER INFORMATION CONTACT: Gary Killion, Manager, Regulations Branch (ANM-114), Transport Airplane Directorate, Aircraft Certification Service, Federal Aviation Administration, 17900 Pacific Highway South C-68966, Seattle, Washington 98168; telephone (206) 431-2114.

SUPPLEMENTARY INFORMATION:

Background

Notice of Proposed Rulemaking (NPRM) No. 85-10, which was published in the **Federal Register** on April 16, 1985 (50 FR 15038), proposed to upgrade the flammability safety standards for materials used in the interiors of transport category airplane cabins.

As discussed in the notice, the FAA established a committee in June of 1978 to examine the factors affecting the ability of the aircraft cabin occupant to survive in the post-crash environment and the range of solutions available. The Committee was composed of fire safety experts from the FAA, National Aeronautics and Space Administration, the aerospace industry, and the general public. Included in the recommendations of this committee, which was known as the Special Aviation Fire and Explosion Reduction (SAFER) Advisory Committee, were further research and development in regard to cabin materials and prompt evaluation and implementation of a method using radiant heat for testing cabin materials. The FAA concurred and initiated the necessary research and development. The resulting research and development program, which was managed and conducted primarily at the FAA Technical Center in Atlantic City, New Jersey, was designed to study aircraft fire characteristics, develop practical test methods, and investigate the feasibility of the various new standards being considered at that time.

Among the tests conducted at the Technical Center were full-scale fire tests using the fuselage of a military C-133 configured to represent a wide-body jet transport. The test conditions simulated representative post-crash external fuel-fed fires. Numerous laboratory tests were also conducted to correlate possible material qualification test methods with the full-scale tests. As a result of these tests, the Ohio State University (OSU) rate-of-heat-release apparatus, as standardized by the American Society of Testing and Materials (ASTM), ASTM-E-906, was determined to be the most suitable for material qualifications. The OSU rate-of-heat-release apparatus utilizes radiant heat, which the SAFER Advisory Committee recommended because it is most representative of the post-crash fire environment. The ability of the test method to adequately discriminate acceptable from unacceptable materials was verified using several generic materials. The generic materials covered a range of flammability characteristics and each was tested and ranked in the full-scale fire test facility. Sample materials were then tested and ranked using the OSU apparatus. The ranking of materials from the OSU tests was identical to that obtained in the full scale fire facility. Thus, the OSU apparatus demonstrated that it would properly rank the relative performance of interior materials in typical post-crash fires. The acceptance criteria proposed in Notice 85-10 were chosen in order to produce a significant retardation of the flashover event which controls occupant survivability, as experienced in the full-scale testing.

As proposed in Notice 85-10, all large interior surface materials installed above the floor in compartments occupied by the crew or passengers would have to comply with the new flammability standards. This would include sidewalls, ceilings, bins and partitions, galley structures, and any coverings on these surfaces. Smaller items, such as windows, window shades, or curtains, would not be included. Floor coverings, floor structure, seats, and service items would not be included for the reasons discussed in Notice 85-10.

As proposed, Part 25 would have required the use of cabin interior materials meeting the new flammability standards for all transport category airplanes for which application for type certification is made after the effective date of the amendment. As originally proposed, Part 121 would have required the use of such materials in all large airplanes newly manufactured 2 years or more after the effective date of the amendment and operated under the provisions of Part 121 or 135, regardless of the basis for type certification. (Section 135.169(a) incorporates the provisions of § 121.312 by reference insofar as operations with large airplanes are concerned.) In addition, all other large airplanes type certificated after January 1, 1958, and operated under the provisions of Part 121 or 135 would have had to be modified to use such materials the first time the cabin interior is replaced after a date 2 years from the effective date of the amendment.

The public comment period for Notice 85-10 originally closed on July 15, 1985; however, as announced in Notice 85-10A (50 FR 30447; July 26, 1985), it was reopened until September 9, 1985. Subsequent to the development of Notice 85-10, an industry trade association and the FAA Technical Center completed two series of round-robin tests to assess the reproductibility of test results using the OSU rate-of-heat-release apparatus among various laboratories. In the round-robin testing, the same group of materials was tested by each laboratory. This assessment was necessary because preliminary testing by the industry to evaluate the impact of the proposed rule yielded results significantly different from those obtained using the FAA OSU apparatus. During the retesting, samples of actual in-service panels and several materials representative of in-service interior panels were tested by the FAA, OSU, and two large airplane manufacturers. The first series of tests completed subsequent to issuance of Notice 85-10

ANM-121-198

indicated that the FAA apparatus had an incorrect heat flux calibration, and there were several significant areas where the other test apparatus differed from that of the FAA. The non-FAA test apparatus were modified to more closely match those of the FAA. After the second series of round-robin tests, much closer results were achieved among the laboratories.

Based on the round-robin tests, the Technical Center recommended certain adjustments in test procedures and acceptance criteria. In particular, the recommendations included: (1) Adjustment of the specimen exposure heat flux from 5 watts per square centimeter (W/cm^2) to 3.5 W/cm^2; (2) elimination of the oxygen depletion method of measuring heat release, leaving only the thermopile method; (3) adjustment of the acceptance criteria for total heat release over the first 2 minutes of sample exposure from 40 to 65 kilowatt-minutes per square meter; and (4) inclusion of a requirement for a peak heat release rate of 65 kilowatts per square meter. The FAA outlined these recommended adjustments in Notice 85–10A and requested public comments thereon.

Following the close of the reopened comment period, all comments were carefully considered; and Amendments 25–61 and 121–189 (51 FR 26208; July 21, 1986) were adopted accordingly. For reasons discussed in the preamble to these amendments, the adopted standards differ from those originally proposed in a number of respects:

1. The adjustments in test procedures and acceptance criteria recommended by the FAA Technical Center and proposed in Notice 85–10A were adopted in lieu of those originally proposed in Notice 85–10.

2. Airplanes with maximum seating capacities of 19 passengers or less are not required to meet the new standards.

3. As proposed, airplanes newly manufactured 2 years or more after the effective date and certain other airplanes in which the cabin interior is replaced 2 years or more after the effective date would have had to meet the new standards. As adopted, airplanes newly manufactured on or after August 20, 1988, must meet interim standards, and those newly manufactured on or after August 20, 1990, must meet the definitive standards. Similarly, certain airplanes in which the cabin interior is replaced on or after August 20, 1988, or August 20, 1990, must meet the interim or definitive standards, respectively.

4. Other nonsubstantive editorial changes were made for clarity.

Commenters responding to Notice 85–10 contended that the progress of this rulemaking initiative was, in general, outpacing developments in materials technology. Nevertheless, the FAA did not consider the comments received by that time sufficient to warrant abandoning the rulemaking or delaying it further, considering the increases in fire-safety that would be achieved. Amendments 25–61 and 121–189 were adopted accordingly; however, the FAA did request further comments on both the test procedure and the appropriateness of the performance criteria. The closing date for the further comments was January 21, 1987. The FAA stated that a document discussing all comments received, presenting FAA responses, and proposing any necessary further revisions to the new standards of Amendments 25–61 and 121–189, would be published in the **Federal Register.**

Following completion of the final rule but prior to its publication in the **Federal Register,** the Aerospace Industries Association of America (AIA) and Air Transport Association of America (ATA) jointly petitioned for further rulemaking that would substitute different test procedures and acceptance criteria. This petition was published in the **Federal Register** on July 21, 1986 (51 FR 26166) along with a request for public comments thereon.

As also discussed in the preamble to Amendments 25–61 and 121–189, some commenters expressed concerns regarding repeatability of test results using the FAA OSU test apparatus and procedures. The commenters noted that, in addition to the initial type certification testing, succeeding material lots would have to be tested from a production standpoint to ensure that their heat release characteristics are not degraded from those of material lot originally tested for type certification. Variations in test results would, therefore, necessitate the use of materials that nominally exceed the new standards of Amendments 25–61 and 121–189 to ensure that the results of individual tests are satisfactory. Such variations in test results could also create a situation in which a given material is found acceptable in the testing conducted by one manufacturer while the material is found unacceptable by another manufacturer. As a result of these concerns, the FAA conducted a third series of round-robin tests to determine whether certain additional refinements in the apparatus and procedures would improve the repeatability of test results. These tests were conducted at the FAA Technical Center, the facilities of two airplane manufacturers, and OSU, using common test specimens. Based on the results of these tests, the FAA Technical Center recommended certain further adjustments in the test apparatus and procedures.

Subsequent to the original closing date for comments but prior to their consideration, the Aviation Staff of the U.S. House of Representatives Committee on Public Works and Transportation requested the FAA to participate in a meeting held on February 6, 1987, concerning the interior materials rulemaking. The purpose of this meeting, which was also attended by representatives of the AIA, ATA, General Aviation Manufacturers Association (GAMA), Association of Flight Attendants (AFA), National Bureau of Standards (NBS) and Office of Management and Budget (OMB), was to enable the committee staff to hear an exchange of views concerning this rulemaking between the FAA and industry representatives. Minutes of this meeting, as prepared separately by the FAA, the AIA, and the ATA, have been added to the docket.

In response to requests from the AIA, ATA, and Suppliers of Advanced Composite Materials Association (SACMA), the comment period was reopened to April 21, 1987 (52 FR 5422; February 20, 1987). In conjunction with reopening the comment period, the FAA also outlined the further adjustments in the test apparatus and procedures recommended by the FAA Technical Center and requested public comments thereon.

Discussion of Comments

Comments were received from a diversity of interested parties ranging from organizations representing various domestic and foreign aircraft manufacturers and operators, to aviation trade unions. Commenters also included government organizations, foreign airworthiness authorities, and producers of candidate interior materials. Due to their interrelationship, comments received in response to the AIA/ATA joint petition for rulemaking have been considered along with those received in response to the request for comments contained in the preamble to Amendments 25–61 and 121–189. Virtually all commenters supported the intent of these amendments to increase airplane fire safety. Many of the commenters are in full support of the standards established by these amendments, while others express concerns regarding the viability of the test method, availability of suitable materials, and cost of compliance.

Three commenters are critical of the full-scale testing that was the basis for the new standards. In that regard, one noted that the testing did not include consideration of external wind effects. While the full-scale testing was conducted in zero wind conditions, the effects of wind were considered. The full-scale testing was preceded by a series of tests in which the effects of wind were evaluated. From those tests, it was concluded that a zero wind condition is the most critical insofar as the contribution of interior materials to the fire is concerned.

Two commenters note that the panels used in the full-scale testing were "generic" and differed somewhat from actual panels used in specific airplane models. Due to these differences, the commenters allege that the results of the full-scale testing are invalid. One of the two commenters recommends that the full-scale fire test should be repeated with industry support using interior panels "acceptable for aircraft interiors." Prior to conducting the full-scale testing, the FAA attempted to purchase representative panels used in actual airplanes. Because the aircraft manufacturers were unable or unwilling to supply such panels, it was necessary to obtain "generic" panels constructed specifically for the testing. While these panels did differ in detail from panels used in actual airplanes, they were constructed of five basic types of facing materials used in the construction of panels of actual airplanes, and the decorative film and the honeycomb core used in the construction of such panels. Following completion of the full-scale testing, specimens of these "generic" panels were used in laboratory tests to obtain a correlation of laboratory test data with the data from the full-scale testing. Because the "generic" panels were used primarily to correlate full-scale and laboratory test data, their use did not, in any way, invalidate the results of the full-scale test. Rerunning the full-scale test would, therefore, provide no benefit insofar as this rulemaking is concerned; and it would unduly delay the safety benefits that will result from the new standards.

One commenter points to a full-scale test conducted in the Federal Republic of Germany as evidence that the FAA correlation of full-scale and laboratory testing has not been proven. The commenter asserts that the latest state-of-the-art materials were used in this test which was conducted in June of 1986 by the Ministry of Transport. The final report of this test is not available to the FAA as of this writing; however, the FAA has been advised informally that the test was conducted using a portion of the fuselage of a wide body transport category airplane currently produced in Europe with interior furnishings that are typically used in that airplane model. Contrary to the commenter's assertion, the FAA has been advised that the interior materials involved had very high heat release values. The fact that an early flashover occurred when materials with high heat release values were used supports the FAA correlation of full-scale and laboratory testing rather than discredits it.

A number of commenters express their belief that the OSU rate-of-heat-release apparatus and procedures are not viable means to establish the acceptability of materials used in the interiors of airplanes. In this regard, they note variations in test results that were obtained when specimens of the same materials were tested in different facilities. As noted above, a round-robin test series was conducted shortly after the issuance of Notice 85–10. During that test series, it was found that the heat release readings obtained at the FAA Technical Center were consistently lower than those obtained with the same materials at each of the other three facilities. Since that time, refinements in the test apparatus and procedures have been developed and verified in two subsequent round-robin test series. These refinements, which are adopted herein, have reduced the variations in test results considerably, and the FAA Technical Center facility no longer consistently produces the lowest test results. The reproducibility has been reduced to ±7.68 percent standard deviation for total heat release and to ±7.82 percent for peak heat release. The repeatability of test results at a given facility has also been improved. The average of the repeatability at the five facilities is ±5.23 percent. It must be noted that the test procedures specify that the total heat release readings for each of three or more samples must be averaged and the peak heat release for each of the samples must also be averaged. Averaging the readings of three or more samples mitigates the remaining differences due to test repeatability considerably. One commenter asserts that it is absolutely essential that all test chambers give the same results at all times. This, of course, is a desirable goal, but its achievement is impossible, as it is with any testing. Considering the inherent variability in fire testing, these reproducibility and repeatability values are considered to be remarkable. They are, in fact, much better than those that would be obtained with Bunsen burners which have been FAA standards for fire testing for years.

One commenter states that the FAA did not determine whether other laboratory test devices could be developed to reliably predict the full-scale fire performance of cabin interior materials, and another recommends that the FAA should do so at this time. Contrary to the commenter's statement, the FAA has considered other devices. The FAA sponsored a study by the NBS in which the relative performance of the OSU apparatus, the NBS cone calorimeter, and other possible devices were compared. While the NBS reported ("The Role of Aircraft Panel Materials in Cabin Fires and Their Properties"; DOT/FAA/CT–84/30 dated June 1985) only fair agreement for energy release data, the materials tested were ranked in the same order by the two devices. An independent comparison of the OSU apparatus, the NBS cone calorimeter, and a Swedish device was conducted in Sweden and reported in the *Journal of Fire and Materials* Vol. 9, No. 4, 1985. According to the report, there was a good correlation of test results among the three devices. There is, therefore, no basis on which to believe that the NBS cone calorimeter or any other device is superior to the OSU rate-of-heat-release apparatus. Unlike that with the OSU apparatus, there has been very little experience in testing airplane interior materials with the other devices; and considerable development would be required to reach the current performance level of the OSU apparatus. The substitution of another device, such as the NBS cone calorimeter, as the required test method would result in an unwarranted delay in the introduction of improved materials in service. In addition, the NBS cone calorimeter is understood to be considerably more expensive than the OSU apparatus, and none are currently in service or available to U.S. airplane manufacturers. Nevertheless, an applicant would have the option of developing and utilizing an alternate test method, such as the cone calorimeter, under the equivalent level of safety provisions of § 21.21(b)(1).

Some commenters assert that the OSU rate-of-heat-release apparatus and the definitive acceptance criteria of 65 kilowatt-minutes per square meter and 65 kilowatts per square meter do not separate materials they characterize as "desirable" from those that are "undesirable." In this regard, they cite test results in which certain specimens of "undesirable" materials are shown to have heat release characteristics that

are better than those of certain specimens of "desirable" materials. Contrary to this assertion, the OSU apparatus and the acceptance criteria do discriminate all but borderline materials. Actually, there is no definition of "desirable" and "undesirable" in this context. These criteria are standards; and, as such, are the minimum values considered acceptable in light of the full-scale testing. It must be recognized that there are frequently variations in examples of a basic generic material and corresponding ranges in performance. These may be due to production tolerances or may be the result of intentional tailoring of the material composition and processing for specific applications. There may also be variations in the finished products due to the type and thickness of decorative finishes applied. Due to these variations, materials cannot be considered "desirable" or "undesirable" on a generic basis. Individual component specimens could exceed the 65 kilowatt-minutes per square meter and 65 kilowatts per square meter standards as long as the average of the heat release values for the tested specimens of that component is equal to or below the 65/65 standard. The FAA has worked with the manufacturing industry to develop improved quality control measures to minimize variations between specimens of components tested in the OSU test chamber. In the case of borderline materials, it must be recognized that some samples will pass and some will fail due to these variations.

Several commenters question the statement in the preamble to Amendments 25–61 and 121–189 that, "compliance with this rule is possible within the current state-of-the-art in cabin materials." In this regard, they assert that the new definitive standards of 65 kilowatt-minutes per square meter and 65 kilowatts per square meter are beyond the capability of the best state-of-the-art materials used in current production and that new materials and processing technology must be developed before industry can comply with the rule. One commenter further states that virtually every interior part in current production must be changed. The reference to "current state-of-the-art" was not intended to mean that the components currently produced for the interiors of transport category airplanes would all meet the new standards. If that were the case, the new standards would provide no improvement in safety. Instead, the statement referred to materials which are currently in production by material suppliers and from which such components can be fabricated by the airplane manufacturers. Clarification of this point has been made to the industry on numerous occasions. The commenter further states that new technology, at present unidentified and undefined, is required for some areas of the interior in order to comply with the new standards. Another commenter states that none of the new candidate materials are viable because they have characteristics that are unacceptable for production airplanes. The commenter then lists six such materials or processes and provides reasons why, in the commenter's opinion, none of the six can be used to meet the new standards. Typically, the reasons cited include high forming temperatures and the need for new, sophisticated tooling.

In contrast to these negative comments, other commenters cite various new materials and processes which meet the definitive standards and are available. Although new or modified manufacturing processes are required in some instances, the materials are currently being produced and are available for use in the manufacture of the interior components. That components made from these materials will meet the definitive standards is evidenced by testing conducted at the FAA Technical Center and other test facilities. It must be noted that, in most instances, these new materials are the products of established, credible companies. It appears that some of the negative comments were based on earlier variants of these materials, as the disadvantages cited for some of the materials are not currently true.

Some of the major interior components currently in service also meet the new standards. One major manufacturer, for example, has been producing transport category airplanes for a number of years with interior sidewall panels constructed of aluminum with a laminated decorative finish. This construction easily meets the new flammability standards. It is alleged by one commenter that such panels are less resistant to penetration of an external fire into the cabin and therefore present a greater hazard than certain other materials that do not meet the new standards. It appears, from testing previously conducted by the FAA, that flame penetration through windows or possibly through the cabin air return grills would occur much earlier than penetration through the fuselage external surface, any insulating material, and the aluminum interior panels. In any event, flashover from such a fire would occur much later than it would occur from a fire that enters the cabin through a fuselage rupture, giving occupants more time to egress safely.

The phenolic resin fiberglass construction extensively used by another major airplane manufacturer marginally meets the new standards. This construction appears to be too marginal as currently used to be a viable means of compliance, considering production tolerances, test variations, etc. Nevertheless, it easily meets the new standards with the application of a recently developed, currently produced laminate.

In light of this and other information available to the FAA, the contention that no materials will be available in time to meet the definitive standards is not credible. Nevertheless, it is recognized that no single material or construction is feasible for use in every component that must meet the new standards, due to various functional and aesthetic considerations. While the FAA does not agree that the concerns stated by the commenters are, or are likely to become, widespread, additional time may be needed in order to develop new materials and production methods for a few unique components. For example, carpeting is generally used on the lower cabin sidewall panels, for protection from abrasion. To date, no carpeting, or other material suitable for such protection, has been shown to meet the new standards. (Carpeting used as a floor covering does not have to meet the new standard for the reason discussed in Notice 85–10.) Additional time will be needed to develop carpeting that meets the new standards or a suitable substitute material. Many materials that meet the new standards and can be used in the fabrication of typical interior components cannot be used in the fabrication of certain other components due to unique shape or functional considerations. There are promising new materials that can be used for these unique components; however, additional time will be needed to develop new fabrication processes for those materials. Rather than addressing these concerns by issuing an extension of the compliance time for materials in general, the FAA is providing for an evaluation, on an individual basis, of those relatively few components which may not meet the new standards. If, as a result of that evaluation, a determination is made that special circumstances exist that make compliance impractical, and that there would be no significant adverse effect on the overall flammability of the cabin, relief may be granted with respect to those few components. Section

121.312(a) is amended to enable the Manager of the Aircraft Certification Division, FAA Northwest Mountain Region, to grant such relief in the form of a deviation from the requirements of that paragraph. A request for a deviation from the requirements of § 121.312(a) must be based on a thorough and accurate analysis of each component used in the airplane cabin, the steps that are being taken to achieve substantial compliance, and, for the few components for which timely compliance cannot be achieved, credible reasons for such noncompliance. Such deviation may be granted to operate airplanes manufactured within 1 year after the applicable date specified in § 121.312(a) or those in which the interior is replaced within 1 year after that date.

Following completion of Amendments 25–61 and 121–189, but prior to their publication in the **Federal Register**, the ATA and AIA jointly petitioned for further rulemaking in which the standards contained in Amendments 25–61 and 121–189 would be replaced by alternate test criteria and standards which they proposed. The ATA and AIA, which represents the major U.S. airlines and the major U.S. manufacturers of transport category airplanes, respectively, were supported in their petition by certain European airplane manufacturers and the International Air Transport Association (IATA). As noted above, comments received in response to this petition were considered along with those received in response to the request contained in the preamble to Amendments 25–61 and 121–189. In essence, the petitioners' proposal involves the following:

1. The adopted definitive standards of 65 kilowatts per square meter for peak heat release and 65 kilowatt-minutes per square meter for 2 minutes would be relaxed to 100 Kilowatts per square meter and 100 kilowatt-minutes per square meter, respectively. These proposed final standards would be the same as the interim standards currently required by Amendment 121–189. The OSU test apparatus and procedures would be retained.

2. The time by which affected components would have to meet the proposed standards would be delayed from August 20, 1988, until a date 3 years after the new rulemaking became effective.

3. A smoke release test using the NBS Smoke Chamber (ASTM F814–83) would be required. Although not currently required by regulation, the petitioner states that the NBS smoke chamber is already in use by domestic and European airplane manufacturers as part of their materials acceptance procedures.

4. A two-tier certification procedure would be used. In lieu of testing representative completed parts, only the basic material systems from which parts would be fabricated later would be subjected to the OSU radiant heat release test and the smoke test. Completed parts would be subjected only to the flammability test requirement that was in effect prior to the adoption of Amendments 25–61 and 121–189.

In support of their proposal, the petitioners assert that adoption of these changes would enhance public safety by the use of proven fire test methods to eliminate the use of undesirable cabin materials and would permit the orderly incorporation of improved materials in production airplanes with a minimum of disruption to public service. The petitioners' proposal is based on the premise that the standards of Amendments 25–61 and 121–189 preclude the use of certain "desirable" materials because their peak and 2-minute heat release values exceed 65 kilowatts per square meter and 65 kilowatt-minutes per square meter, respectively. Raising these standards to 100 kilowatts per square meter and 100 kilowatt-minutes per square meter would allow these materials to pass insofar as testing with the OSU apparatus is concerned. In order to preclude the use of "undesirable" materials that have heat release values less than 100 kilowatts per square meter and 100 kilowatt-minutes per square meter, a smoke test would also be required. According to the petitioners, "undesirable" materials in this heat release range have excessive Smoke release characteristics.

A number of commenters support the petitioners' proposal by citing their beliefs that the OSU apparatus and test procedures do not discriminate "desirable" materials from those that are "undesirable" and that there will be no materials or processes available in sufficient time to comply with the new standards.

Other commenters disagree. Some cite various available materials and processes which are already or will be available to meet the new standards. Some question the validity of the smoke test in assessing the flammability characteristics of interior materials.

The petitioners propose a delay in implementing the new standards until a date 3 years after the date on which their proposed rulemaking would become effective. Considering the time required for the normal rulemaking process, this would mean that the petitioners' proposed standards would not be implemented for at least 4 years. None of the commenters, including the petitioners, have presented convincing arguments to date as to why even the much more stringent adopted definitive standards cannot be met by August 20, 1990. As most of the affected components in currently manufactured transport category airplanes already meet the petitioner's standards, there is virtually no evident need for the proposed delay if the petitioners' proposed standards were adopted.

As noted by the National Transportation Safety Board (NTSB) in their comments to the docket, there has been no scientific correlation made between the rate of heat release and smoke production. The NTSB comment is consistent with testimony of NBS and FAA Technical Center fire safety experts in the meeting with the Staff of the House of Representatives Committee on Public Works and Transportation on February 6, 1987.

As shown in the full-scale test and other testing, the critical factor in survivability is the time afforded for egress before flashover occurs. The release of large quantities of heated gases, which eventually result in flashover, is not relative to the amount of smoke released. The correlation of the amount of heat released by materials to the time of flashover and, in turn, to the time in which survival is possible is based on scientific testing and analyses conducted by the FAA and others. In contrast, the fact that certain materials, which are classed as "desirable" by the petitioners and the supportive commenters, exhibit low smoke release characteristics is a fortuitous coincidence, and any conclusions derived from that coincidence are not based on scientific evidence. In this regard, the FAA understands that the interior materials involved in the early flashover experienced in the German full-scale test met the manufacturer's smoke emission criteria.

The NTSB also concurs with the FAA belief that insufficient flammability data are available to determine whether there is a correlation between the flammability of individual components of an assembled system and the flammability of the system. The FAA is, in fact, unaware of any data developed to show such a correlation. The petitioner's proposal to use a two-tier certification procedure is, therefore, considered inadequate.

One commenter recommends that the Fire Research Center of the NBS should

review the technical basis of the new flammability standards as adopted (i.e., the correlation of large-scale and laboratory testing, the test procedure and the acceptance criteria) and the petitioners' proposal. The NBS has already reviewed the new standards. There was, in fact, extensive cooperation between the FAA Technical Center and the NBS throughout the development of these standards. In regard to the petitioners' proposal, a fire safety expert of the NBS testified, in the meeting with the Staff of the House of Representatives Committee on Public Works and Transportation, that there was no scientific correlation of smoke release and flammability of materials.

Because there is no known correlation between smoke release and flammability, the petitioners' proposal would merely relax the standards adopted with Amendments 25–61 and 121–189. There are few interior materials used in current production of transport category airplanes that do not have heat release characteristics that are better than the standards proposed by the petitioner. There would, therefore, be virtually no improvement in cabin fire safety if the petitioners' proposal were adopted in lieu of the recently adopted standards of Amendments 25–61 and 121–189.

Some commenters do, however, believe that standards for smoke emission should be established in addition to the recently adopted flammability standards. Although smoke testing has not been shown to be of any value as a substitute for appropriate flammability standards, they believe that it should be conducted to minimize any direct hazards due to smoke, such as obscuration of escape routes, etc. Smoke testing was proposed by the ATA and AIA in their joint petition for rulemaking and offered for public comment. In light of the comments received and because it would place no additional burden on the manufacturers, § 25.853(a) and Appendix F are amended to require smoke testing in order to preclude the indiscriminate use of materials which produce excessive smoke, since suitable alternative materials are available. A corresponding amendment is also made to § 121.312(a) to require smoke testing coincident with the definitive rate of heat release standards.

The final disposition of the petitioners' request is the subject of a separate document and, except as noted above, no further action concerning their proposals is taken insofar as this rulemaking is concerned.

Two commenters believe that the flammability standards should be extended to window shades, and one of the two believes that they should also be applicable to curtains. Small parts, such as window shades, are not required to meet the new standards because their overall contribution to the flammability of the cabin interior is small. It is also noted that window shades are normally retracted behind the sidewall panels and not exposed to flames during the time period in which survival is still possible. The OSU rate-of-heat-release apparatus and procedures are not adaptable for testing fabrics. Requiring curtains to meet heat release standards would require the development of new test method which would be beyond the scope of this rulemaking.

One commenter believes that tapestries installed on bulkheads for aesthetics should be excluded from meeting the new standards. The commenter asserts that they constitute less than 1 percent of the interior linings's exposed surface; they are local and isolated so that they cannot contribute to the progression of a flame in a longitudinal direction; and their contrast in design, color and texture adds an important element to the otherwise stark interior lining. The FAA does not concur that such tapestries should be excluded. The addition of the tapestry as an integral part of the bulkhead may compromise the ability of the bulkhead to meet the new standards and add to the overall flammability of the interior. The comment that such tapestries cannot contribute to the progression of a flame in a longitudinal direction does not appear to be relevant, as a bulkhead containing a tapestry may be near a rupture in the fuselage sidewall. If there were such a rupture, the bulkhead could be in the direct path of an external fire as it enters the cabin. Although such tapestries do improve the appearance of the interior, the safety improvements that will result from the new rule far outweigh any aesthetic considerations.

One commenter notes that § 25.853(a-1) states: ". . . The outer surfaces of galleys. . ." and inquires whether this means the outer decorative finish will be tested and structural panels will not be tested. Structural items, to the extent they form the outer surfaces of galleys, large cabinets, stowage bins, etc., must be tested with the decorative laminate installed. Internal structure that is protected from exposure to flames during the time period when survival is possible (i.e., until flashover occurs) is not required to meet the new standards.

One commenter believes that passage stowage bins may be opened and left open by passengers in panic situations after a controlled crash. The commenter, therefore, believes that the construction materials used on the inside of stowage bins should also meet the new standards. While it is possible that some bins may be left open, they will generally remain closed on instruction of the crewmembers to leave personal belongings behind and evacuate the airplane immediately. For the few that might be left open, much of the interior surface would be isolated from the fire by the bin contents. It is, therefore, not considered necessary to require the inner surfaces of passenger stowage bins to meet the new standards. Generally, the inner surfaces of such bins are constructed of the same material as the outer surfaces, less the decorative laminate. In that case, the materials would be shown to meet the new standards when tested as an outer surface.

One commenter inquired as to whether the test is to be conducted with a simulated specimen made with the same materials and processes used for the production article or with the individual surface components. Another commenter recommends that the final specification of test panel thickness be delayed until more experience has been gained in interior panel construction with the new materials. Section 25.853(a-1) specifies the components which must meet the requirements of Part IV of Appendix F. It is not necessary to test the production articles, per se; however, the test specimen must have a thickness representative of the production article, rather than an arbitrarily specified thickness, in order to ensure that the production article does, indeed, meet these standards.

One commenter believes the figures are deficient and must be revised in order to better reflect the test apparatus. The commenter does not note any specific areas; however, the FAA will monitor compliance with the new standards and propose changes to the figures in the future if shown desirable as further experience is gained. In the same vein, another commenter believes an advisory circular (AC) should be prepared to provide guidance in showing compliance with the new standards. The FAA concurs that the preparation of an AC could be beneficial; however, the FAA does not consider it to be essential or necessary for compliance with the rule. It will, therefore, be delayed in order to benefit from the initial experience in showing compliance with the new standards.

Two commenters request further clarification of the phrase "substantially complete replacement" that appears in

§ 121.312(a) (5) and (6). For reasons discussed in the preambles to Notice 85–10 and to Amendments 25–61 and 121–189, these subparagraphs generally apply only when all of the components subject to § 25.853(a–1), i.e., interior ceiling and wall panels (other than lighting lenses), partitions, and the outer surfaces of galleys, large cabinets, and certain stowage compartments, are replaced. The qualifying term "substantially complete" is used, however, to ensure that persons cannot circumvent the intent of the rule by replacing all but a small, insignificant portion of the components. Generally, there would be a complete replacement of the interior if all but a few units of the affected components are replaced. For example, compliance with the new standards would be required if all of the components subject to § 25.853(a–1), except a few sidewall panels, were replaced, or if all but a few storage bins were replaced. It is not possible to precisely define "few units," because the number will vary with the total number of units in the airplane and the relative size of the units. It is recognized that a person could avoid using materials that meet the new standards by replacing a portion, e.g., 50 percent, at one time, and the remainder at a later date. It does not, however, appear that this will become a widespread practice. Nevertheless, if materials that do not meet the new standards do remain in service in a significant number of air carrier airplanes because they are not replaced as anticipated, and a substantial increase in overall safety can be realized, the FAA will, as noted in the preamble to Notice 85–10, consider a mandatory retrofit program in a subsequent rulemaking action.

Two commenters suggest editorial changes for clarity. One believes that a new § 25.853(a–2) should be added to state that, "smaller items, such as windows, window shades, or curtains, as well as floor coverings, floor structure, seats, and service items, are not included and do not have to meet the requirements in (a–1). All of such materials have to meet the flammability requirements prescribed in paragraph (a) of this part." As discussed in the preamble to Notice 85–10, these would be correct statements. It does not appear, however, that clarity would be enhanced by their addition. These items are clearly not required to comply with the new standards due to their absence in § 25.853(a–1). The other commenter suggests that the word "component" should be deleted from § 121.312 (5) and (6). As the reason for this deletion, the commenter repeats a statement in the preamble to Notice 85–10 that replacement of individual components on a piece-meal basis will not significantly increase the level of safety and might result in incompatibility of parts. This, of course, does reflect the intent of the rule; however, the current wording does not imply that individual components would have to meet the new standards, and the phrase "components subject to § 25.853(a–1)" is necessary to exclude the components not subject to § 25.853(a–1). For example, whether the seats or flooring is replaced is not relevant to a determination that there is a "substantially complete replacement" of the components that must meet these flammability standards.

One commenter requests clarification of whether galley inserts such as oven racks, standard units, meal trolleys, waste trolleys, etc., must meet the new standards. Generally, such items do not have to meet the new standards because they are not exposed when they are stowed. There are, however, interior arrangements in which major surfaces of such items are exposed even when they are stowed. If the exposed surfaces of such units, individually or collectively, comprise a surface area that is significant from a flammability standpoint, the exposed surfaces must comply with the new flammability standards.

The statement in the preamble to Amendments 25–61 and 121–189 that "components removed from one airplane, refurbished and installed in another airplane on a rotational basis would have to meet the new flammability requirements" is characterized by one commenter as a new requirement that was added in the final rule without being proposed in Notice 85–10. The commenter appears to be confusing the word "replacement" with the qualified term "essentially complete replacement." As discussed in the preamble, interior components that are removed, refurbished, and reinstalled in the same airplane would not be "replaced." Because they would not be replaced, § 121.312(a)(6) does not require these components to meet the new standards, regardless of whether they constitute all, or essentially all, of the cabin interior components subject to § 25.853(a–1). If, on the other hand, the refurbished components installed in the airplane are not those removed earlier from that airplane, the components removed from the airplane have, by definition, been "replaced." The fact that certain components have been "replaced" does not, in itself, mean that the newly installed components have to meet the new standards. As discussed above, whether the components that "replace" the removed components have to meet the new standards depends on whether there is an "essentially complete replacement" of the cabin interior components.

The same commenter states that the FAA failed to comply with the requirements of § 604(a) (2) and (3) of the Administrative Procedures Act (APA) by not discussing significant comments and alternatives provided by parties affected by the Notice. The commenter lists a number of comments which, according to the commenter, were not discussed. Actually, the listed comments were discussed in varying depths. That the FAA did not accept the commenter's position does not mean that the comments were not considered. The commenter must recognize that when comments are in conflict with other comments or with other information available to the FAA, the FAA must accept the position deemed to have the most credence. The commenter is particularly disturbed that the alternative standards proposed in the joint ATA/AIA petition for further rulemaking were not evaluated and addressed in the preamble to Amendments 25–61 and 121–189. Although the petitioners had informally indicated their intent to petition for further rulemaking earlier, neither the petition nor any supporting data were received prior to December 24, 1985, when the rulemaking was completed and forwarded from the FAA for executive review. Delaying the rulemaking until the petition was received would have resulted in an unwarranted delay in the implementation of the new safety standards. Nevertheless, the FAA did provide for further consideration of the matter by requesting the additional comments addressed in this document.

One commenter believes that requiring compliance with interim standards within 2 years and with the definitive standards within 4 years will result in greater costs than requiring compliance with the definitive standards within 2 years, as originally proposed. As the basis for this belief, the commenter states that interior materials meeting the interim standards will not be acceptable to airlines taking delivery both before and after the interim period because of costly complex spares and maintenance problems.

Compliance with the interim standards is not expected to present a significant burden in itself, because, as noted above, there are few interior

materials used in current production of transport category airplanes that do not have heat release characteristics that are better than the interim standards. As discussed in the preamble to Amendments 25–61 and 121–189, the interim standards were established primarily to prevent any degradation in the present level of safety due to increased use of materials found to be especially flammable. While some airlines may choose to voluntarily use components that meet the definitive standards in airplanes produced during the interim period, it does not appear that their choice would be due to spares and maintenance considerations. Typically, the interior components that must meet these standards do not fail unexpectedly in service. Rather, they deteriorate on a slow, predictable basis due to wear and tear. Even when deteriorated, such components are frequently refurbished and reused. Consequently, there is no need to maintain an extensive supply of spares for such components; and having two interior configurations would not significantly increase the number of spares needed. It appears that a more likely reason for voluntarily using components that meet the definitive standards during the interim period would be the safety benefits that will result from their use. In any event, costs due to voluntary compliance are not attributable to this rulemaking.

The only comments received concerning the further adjustments in the test apparatus and procedures recommended by the FAA Technical Center are outlined in the notice of reporting of the comment period are favorable. These adjustments are, therefore, adopted as proposed.

Since the time Amendment 25–61 was adopted, questions have been raised concerning the applicability of the type certification standards contained in that amendment to cabin windows and clear vision panels in cabin partitions, galleys (including galley carts and other rotatable galley equipment), and isolated compartments. The FAA will address these issues in separate rulemaking or advisory action.

Other nonsubstantive editorial changes have also been made for clarity. In particular, § 121.312(a) (1), (2), (5), and (6) have been changed to clarify that only compliance with § 25.853(a–1) is required, not § 25.853 in its entirety. Minor nonsubstantive changes have also been made in the test procedures to more closely reflect the manner in which the tests are actually conducted.

Regulatory Evaluation

I. Evaluation of Cost and Benefits

Two commenters reiterate their earlier contentions that the actual cost impact will be greater than the value estimated in the original regulatory evaluation for these amendments. The FAA considers these comments worthy of further discussion. A revised regulatory evaluation reflecting the issues raised by these comments has been placed in the docket, and the revisions are summarized below.

The contentions of the commenters are based, to a large extent, on the premise that no suitable candidate materials will be available in time to comply with the new standards. The FAA is aware of some materials that meet the new standards and are currently in use in the cabins of transport category airplanes. Other materials are available for such use. As discussed above, § 121.312(a) is amended to provide relief for the few unique components for which timely compliance cannot be achieved. The rule has, therefore, been revised to accommodate their concerns to the limited extent to which the FAA concurs with those comments.

It is difficult for either the FAA or the manufacturing industry to estimate the compliance costs of the new flammability standards with great precision. The development of the new or modified manufacturing processes found necessary or desirable for the fabrication of compliant interior components involves experimentation with unfamiliar applications of relatively new materials. Estimates by manufacturers can, therefore, be expected to be extremely conservative because of this uncertainty. While the FAA does not consider the cost of compliance to be nearly as great as the manufacturers' estimates, the FAA does acknowledge that the adoption of these new flammability standards will be more costly than originally estimated. Due to this same uncertainty, it is difficult to predict the exact extent of the difference between the amount originally estimated and the actual cost. Nevertheless, the FAA still considers that the new standards are in the best overall interest of the public. It is difficult to separate the incremental costs of the rule from the cost of the ongoing research and development efforts of materials suppliers, interior manufacturers, and airplane manufacturers. Indeed, in its regulatory evaluation, the FAA anticipated that approximately 48 percent of the U.S. airplane fleet would have met the new standards voluntarily by the year 2000; therefore, no benefits were attributed to the rule for those airplanes. This voluntary action would have a similar mitigating effect on the costs of the rule. This mitigating effect was not fully recognized by the commenters. The rulemaking action of the FAA will expedite the movement toward improved flammability characteristics for airplane interiors that industry has been pursuing in recent years.

Furthermore, the FAA only estimated potential benefits that could be realized by U.S. air carriers. United States manufacturers, however, included production costs for future airplane deliveries to foreign airlines in their cost estimates. Consequently, these estimates were excessive, even after allowance is made for airplanes that will be delivered by foreign manufacturers to U.S. air carriers.

Additionally, the FAA estimate of benefits attributable to the rule was extremely conservative. The benefits were estimated using a value of only $650 thousand per statistical fatality avoided. The Department of Transportation currently advocates a *minimum* value of one million dollars per statistical fatality avoided. The FAA originally estimated that an average of only about nine lives could potentially be saved per year if all large transport category airplanes operated by U.S. air carriers were equipped with interiors that have improved flammability characteristics as a result of both voluntary and FAA mandated actions. This estimate, however, was excessively low because of a misinterpretation of the data used in its derivation. The estimate should have been that, on average, from nine to sixteen lives could potentially be saved per year from both voluntary and FAA mandated actions, growing as traffic activity, and consequently passenger exposure, increases over time. The FAA estimated that the rulemaking itself would contribute to the realization of these potential safety improvements at a very slow pace, with the cumulative share attributable to the rulemaking increasing in annual increments of three percent from zero through 1988 to only 36 percent by the year 2000, resulting in a total of about 30 potential fatalities avoided. Thus, any appreciable benefit from the FAA action would not be realized until very late in the analysis period. Furthermore, the most substantial benefits would not be realized until well in the future, far beyond the 15 year analysis period used in the FAA regulatory evaluation. Nevertheless, this is a long term problem requiring a long term solution; and, to

achieve the safety objective, immediate action is necessary.

One final point must be made with respect to the evaluation of benefits. Although estimated benefits have been based upon average annual values in the evaluation to reflect the fact that an accident could occur at any time during the analysis period, the benefits of the rule will, in all likelihood, be realized in a more random, erratic manner, and in much larger increments. Thus, this rule could prevent numerous casualties in an accident occurring relatively soon after its implementation, or in an accident that does not occur until twenty to thirty years later. This rulemaking is intended to prevent the worst case scenario.

Some trade association commenters estimated that the cost of the rule to its members would be approximately $400 million through 1999, or about $300 million when discounted to the present. The FAA has reviewed those estimates and has concluded that they are somewhat high. The FAA considers that the cost to U.S. firms attributable to regulatory action would not exceed about $250 million through 1999, or about $175 million when discounted to the present. The cost per fatality avoided (discounted present value), based upon saving 30 lives during the analysis period, would be approximately $5.8 million. Although this cost per fatality avoided may seem somewhat high, it must be remembered that this rulemaking action represents only the beginning of a long term solution, and that many of the benefits of the improved flammability standards will not be realized until long after the analysis period. Further, to put the costs of this rule into a more practical perspective, the cost per U.S. enplanement would only be on the order of ten cents when annualized into the future using a capital recovery factor, and divided by the number of enplanements forecast for U.S. air carriers in future years. (The cost per enplanement would be even lower if future worldwide enplanements were considered.) Ten cents per enplanement is far below any meaningful threshold of perception by the typical airline passenger—the ultimate bearer of the cost of this rulemaking.

The present amendments involved minor refinements in the test procedures and apparatus required to demonstrate compliance with the standards adopted in the 1986 final rule for materials used in the cabins of certain transport category airplanes, an additional requirement for smoke testing, and a provision that would allow deviations to be granted under special circumstances for those few components for which timely compliance cannot be achieved.

The refinements in the test apparatus and procedures are intended only to improve the repeatability of test results from one test run to another and from one laboratory to another. These refinements do not involve any changes in the heat release standards adopted in Amendment Nos. 25–61 and 121–189, and therefore will not affect those materials found to be acceptable under the new standards. The cost of these refinements is only a few hundred dollars per test apparatus.

The new requirement for smoke testing is not expected to be very costly because most airplane manufacturers and the larger firms that manufacture aircraft interiors already conduct such testing routinely as part of their procurement procedures. Some additional expense will be incurred, however, as a result of conducting these tests to meet a formal FAA certification requirement rather than for less formal purposes. Further, there are approximately a half dozen smaller firms that fabricate cabin interior retrofit kits and most of these firms will find it necessary to obtain a smoke test chamber. This equipment can be acquired for about $30,000 per unit. However, because those materials meeting the recently adopted heat release standards also meet the new smoke standards, the smoke test will not affect those materials found to be acceptable under the new heat release standards. Therefore, no costs will be incurred as a result of the need to change materials to meet the smoke test requirements.

Finally, the deviation authority is intended to provide relief to operators only *after* the FAA has determined that special circumstances exist. Because this provision is transitional and will involve relatively few components, any impacts that may result are expected to be minimal.

II. Regulatory Flexibility Act Determination

A Final Regulatory Flexibility Determination was made in compliance with the Regulatory Flexibility Act. The original conclusion that the amendment would not result in a significant economic impact on a substantial number of small entities is not altered by the revised cost estimates or by the present amendment. The airframe manufacturers affected by the amendments in Part 25 are not small entities. Small entities that conduct operations under Part 121 are defined by FAA Order 2100.14A, *Regulatory Flexibility Criteria and Guidance*, as operators that own nine or fewer aircraft. Most small entity operators typically use airplanes at the smaller end of the airplane size range found in Part 121 operations, and therefore would use the least expensive new interiors and interior replacement kits. Consequently, any incremental costs resulting from the amendments to Part 121 are not expected to be burdensome, especially for existing airplanes because the interiors of these airplanes are replaced very infrequently, and the amended rule only requires that the new standards be met at the first substantially complete replacement of the cabin interior. Finally, the only small entities that could potentially be affected by the present amendments are the small manufacturers of interior retrofit kits that might find it necessary to obtain smoke test chambers. Order 2100.14A establishes the criteria for a "a substantial number of small entities" as "a number which is not less than eleven and which is more than one-third of the small entities subject to a proposed or existing rule." Because there are only about a half dozen smaller firms that fabricate retrofit kits (and some of these may even be too large to be considered small entities under Order 2100,14A), there are less than the eleven firms necessary to meet the "substantial number" criteria. Therefore, the FAA has determined that both the previous and the present amendments will not result in a significant economic impact on a substantial number of small entities.

III. International Trade Assessment

This amendment will have no impact on trade opportunities for both U.S. firms doing business overseas and foreign firms doing business in the U.S., as there are no significant benefits or costs. Also, airplanes newly manufactured for the U.S. market will have to comply with the rules, regardless of whether they are made by a U.S. or a foreign manufacturer.

Federalism Implications

The regulations adopted herein do not have substantial direct effects on the states, on the relationship between the national government and the states, or on the distribution of power and responsibilities among the various levels of government. Thus, in accordance with Executive Order 12612, it is determined that such a regulation does not have federalism implications warranting the preparation of a Federalism Assessment.

Conclusion

For the reasons discussed earlier in the preamble, the FAA has determined that this regulation is not considered to be major under Executive Order 12291. The FAA has determined that this action is significant under DOT Regulatory Policies and Procedures (44 FR 11034; February 26, 1979). In addition, the FAA certifies that this rule does not have a significant economic effect on a substantial number of small entities under the criteria of the Regulatory Flexibility Act, since none would be affected. A regulatory evaluation of this action, including a Regulatory Flexibility Determination and a Trade Impact Assessment, has been prepared for this regulation and has been placed in the docket. A copy of this evaluation may be obtained by contacting the person identified under the caption "**FOR FURTHER INFORMATION CONTACT.**"

List of Subjects

14 CFR Part 25

Air transportation, Aircraft, Aviation safety, Safety.

14 CFR Part 121

Aviation safety, Safety, Air carriers, Air transportation, Aircraft, Airplanes, Flammable materials, Transportation, Common carriers.

Adoption of the Amendment

Accordingly, Parts 25 and 121 of the Federal Aviation Regulations (FAR), 14 CFR Parts 25 and 121 are amended as follows:

PART 25—AIRWORTHINESS STANDARDS: TRANSPORT CATEGORY AIRPLANES

1. The authority citation for Part 25 continues to read as follows:

Authority: 49 U.S.C. 1344, 1354(a), 1355, 1421, 1423, 1424, 1425, 1428, 1429, 1430; 49 U.S.C. 106(g) (Revised Pub. L. 97–449, January 12, 1983).

2. By amending § 25.853 by revising paragraph (a–1) to read as follows:

§ 25.853 Compartment interiors.

* * * * *

(a–1) For airplanes with passenger capacity of 20 or more, interior ceiling and wall panels other than lighting lenses), partitions, and the outer surfaces of galleys, large cabinets, and stowage compartments (other than underseat stowage compartments and compartments for stowing small items, such as magazine and maps) must also meet the test requirements of Parts IV and V of Appendix F of this Part, or other approved equivalent method, in addition to the flammable requirements prescribed in paragraph (a) of this Section.

* * * * *

3. By amending Appendix F by removing paragraph (e)(6) of Part IV and marking it "reserved;" removing Figures 2 through 5 of Part IV; redesignating Figures 6A, 6B, 7, and 8 of Part IV as Figures 2A, 2B, 3, and 4, respectively; revising Figures 1, 2A, 2B, 3 and 4 of Part IV; and revising paragraphs (b)(2), (3), (6), (7), (8) and (8)(i), (c)(1), (d)(1), (e)(7), and (f)(2) of Part IV and adding a new Part V to read as follows:

Appendix F

* * * * *

Part IV.—Test Method to Determine the Heat Release Rate From Cabin Materials Exposed to Radiant Heat.

* * * * *

(b) * * *

(2) *Thermopile.* The temperature difference between the air entering the environmental chamber and that leaving is monitored by a thermopile having five hot and five cold, 24-gauge Chromel-Alumel junctions. The hot junctions are spaced across the top of the exhaust stack, 10 mm below the top of the chimney. One thermocouple is located in the geometric center, with the other four located 30 mm from the center along the diagonal toward each of the corners. The cold junctions are located in the pan below the lower air distribution plate (see paragraph (b)(4)). Thermopile hot junctions must be cleared of soot deposits as needed to maintain the calibrated sensitivity.

(3) *Radiation Source.* A radiant heat source for generating a flux up to 100 kW/m^2, using four silicon carbide elements, Type LL, 20 inches (50.8 cm) long by ⅝ inch (1.54 cm) O.D., nominal resistance 1.4 ohms, is shown in Figures 2A and 2B. The silicon carbide elements are mounted in the stainless steel panel box by inserting them through 15.9-mm holes in 0.8 mm thick ceramic fiber board. Location of the holes in the pads and stainless steel cover plates are shown in Figure 2B. The diamond shaped mask of 24-gauge stainless steel is added to provide uniform heat flux over the area occupied by the 150- by 150-mm vertical sample.

* * * * *

(6) *Specimen Holders.* The 150-mm x 150-mm specimen is tested in a vertical orientation. The holder (Figure 3) is provided with a specimen holder frame, which touches the specimen (which is wrapped with aluminum foil as required by paragraph (d)(3) of this Part) along only the 6-mm perimeter, and a "V" shaped spring to hold the assembly together. A detachable 12-mm × 12-mm × 150-mm drip pan and two .020-inch stainless steel wires (as shown in Figure 3) should be used for testing of materials prone to melting and dripping. The positioning of the spring and frame may be changed to accommodate different specimen thicknesses by inserting the retaining rod in different holes on the specimen holder.

Since the radiation shield described in ASTM E-906 is not used, a guide pin is added to the injection mechanism. This fits into a slotted metal plate on the injection mechanism outside of the holding chamber and can be used to provide accurate positioning of the specimen face after injection. The front surface of the specimen shall be 100 mm from the closed radiation doors after injection.

The specimen holder clips onto the mounted bracket (Figure 3). The mounting bracket is attached to the injection rod by three screws which pass through a wide area washer welded onto a ½-inch nut. The end of the injection rod is threated to screw into the nut and a .020 inch thick wide area washer is held between two ½-inch nuts which are adjusted to tightly cover the hole in the radiation doors through which the injection rod or calibration calorimeter pass.

(7) *Calorimeter.* A total-flux type calorimeter must be mounted in the center of a ½-inch Kaowool "M" board inserted in the sample holder to measure the total heat flux. The calorimeter must have a view angle of 180 degrees and be calibrated for incident flux. The calorimeter calibration must be acceptable to the Administrator.

(8) *Pilot-Flame Positions.* Pilot ignition of the specimen must be accomplished by simultaneously exposing the specimen to a lower pilot burner and an upper pilot burner, as described in paragraph (b)(8)(i) and (b)(8)(ii), respectively. The pilot burners must remain lighted for the entire 5-minute duration of the test.

(i) *Lower Pilot Burner.* The pilot-flame tubing must be 6.3 mm O.D., 0.8 mm wall, stainless steel tubing. A mixture of 120 cm^3/min. of methane and 850 cm^3/min. of air must be fed to the lower pilot flame burner. The normal position of the end of the pilot burner tubing is 10 mm from and perpendicular to the exposed vertical surface of the specimen. The centerline at the outlet of the burner tubing must interest the vertical centerline of the sample at a point 5 mm above the lower exposed edge of the specimen.

* * * * *

(c) * * *

(1) *Heat Release Rate.* A burner as shown in Figure 4 must be placed over the end of the lower pilot flame tubing using a gas tight connection. The flow of gas to the pilot flame must be at least 99 percent methane and must be accurately metered. Prior to usage, the wet test meter is properly leveled and filled with distilled water to the tip of the internal pointer while no gas is flowing. Ambient temperature and pressure of the water are based on the internal wet test meter temperature. A baseline flow rate of approximately 1 liter/min is set and increased to higher preset flows of 4, 6, 8, 6, and 4 liters/min. The rate is determined by using a stopwatch to time a complete revolution of the wet test meter for both the baseline and higher flow, with the flow returned to baseline before changing to the next higher flow. The thermopile baseline voltage is measured. The gas flow to the burner must be increased to the higher preset flow and allowed to burn for 2.0 minutes, and the thermopile voltage must be measured.

The sequence is repeated until all five values have been determined. The average of the five values must be used as the calibration factor. The procedure must be repeated if the percent relative standard deviation is greater than 5 percent. Calculations are shown in paragraph (f).

* * * * *

(d) *Sample Preparation.*

(1) The standard size for vertically mounted specimens is 150 × 150 mm with thicknesses up to 45 mm.

* * * * *

(e) *Procedure.*

* * * * *

(6) [Reserved]

(7) Injection of the specimen and closure of the inner door marks time zero. A record of the thermopile output with at least one data point per second must be made during the time the specimen is in the environmental chamber.

* * * * *

(f) * * *

(1) * * *

(2) Heat release rates may be calculated from the reading of the thermopile output voltage at any instant of time as

$$HRR = \frac{V_m \times K_h}{.02323m^2}$$

HRR = Heat release Rate kw/m²
V_m = measured thermopile voltage (mv)
K_h = Calibration Factor (Kw/mv)

* * * * *

BILLING CODE 4910-13-M

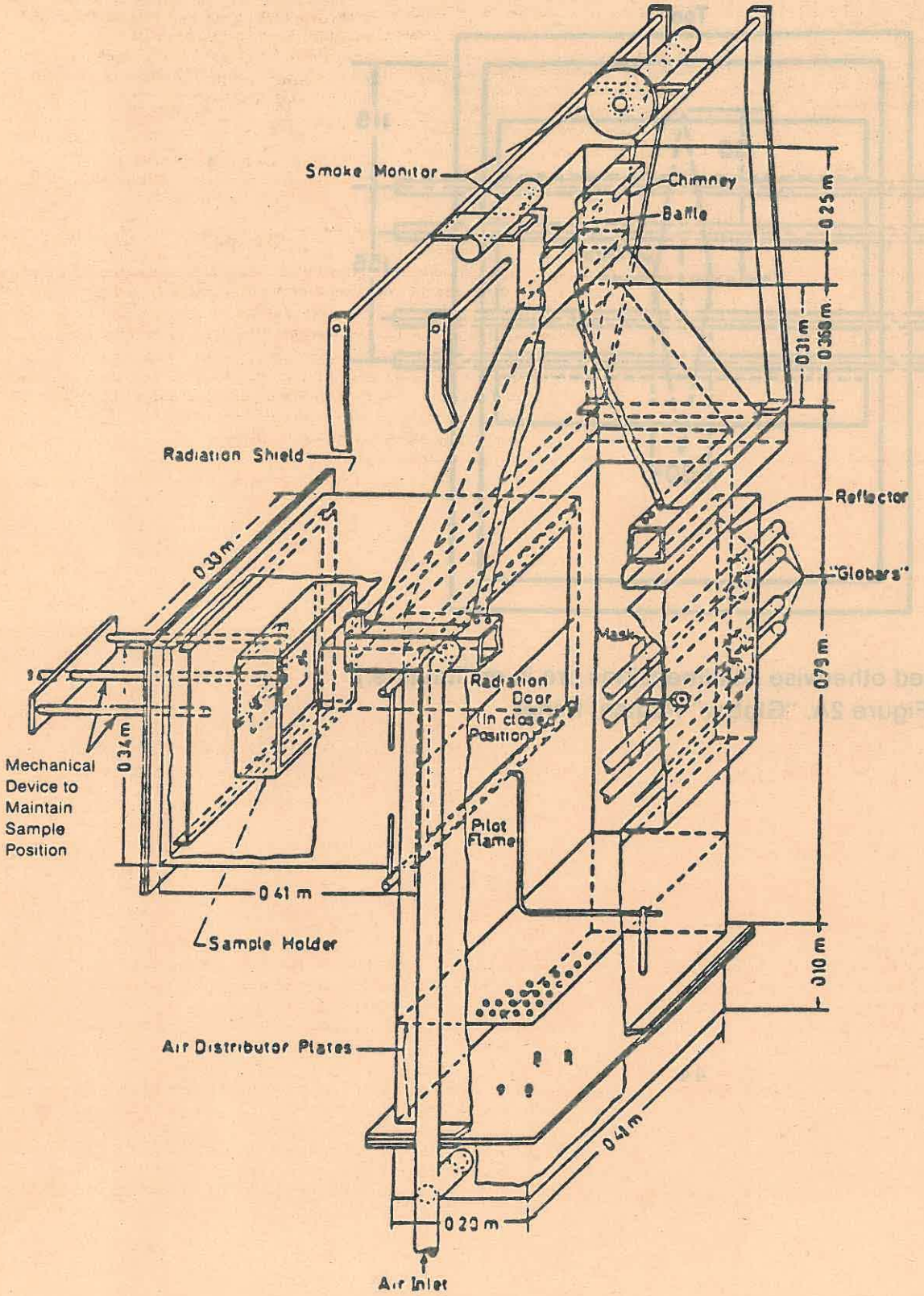

Figure 1. Release Rate Apparatus

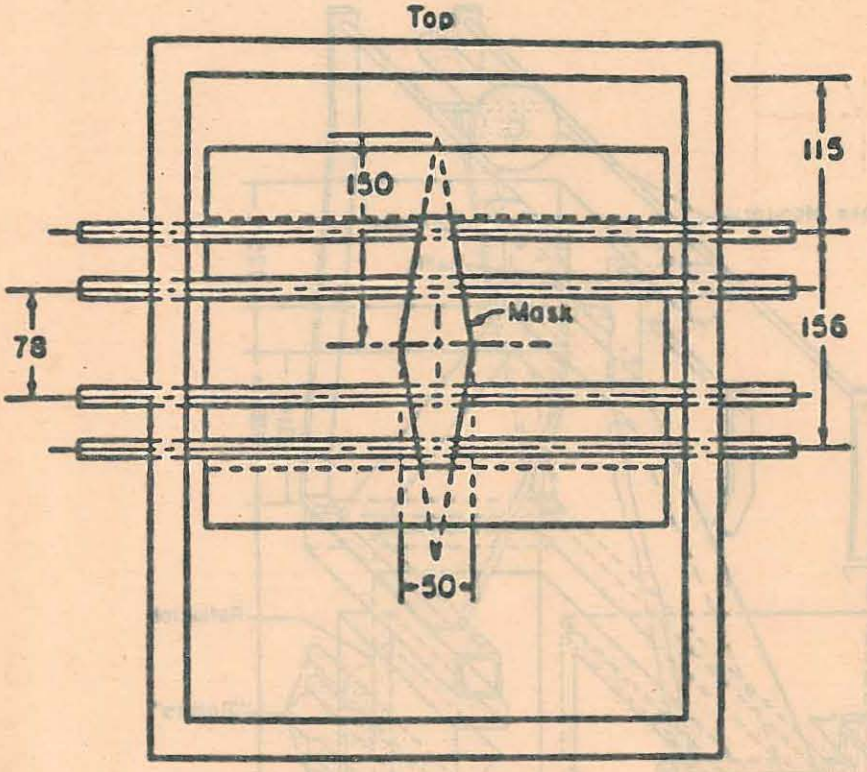

(Unless denoted otherwise all dimensions are in millimeters.)

Figure 2A. "Globar" Radiant Panel

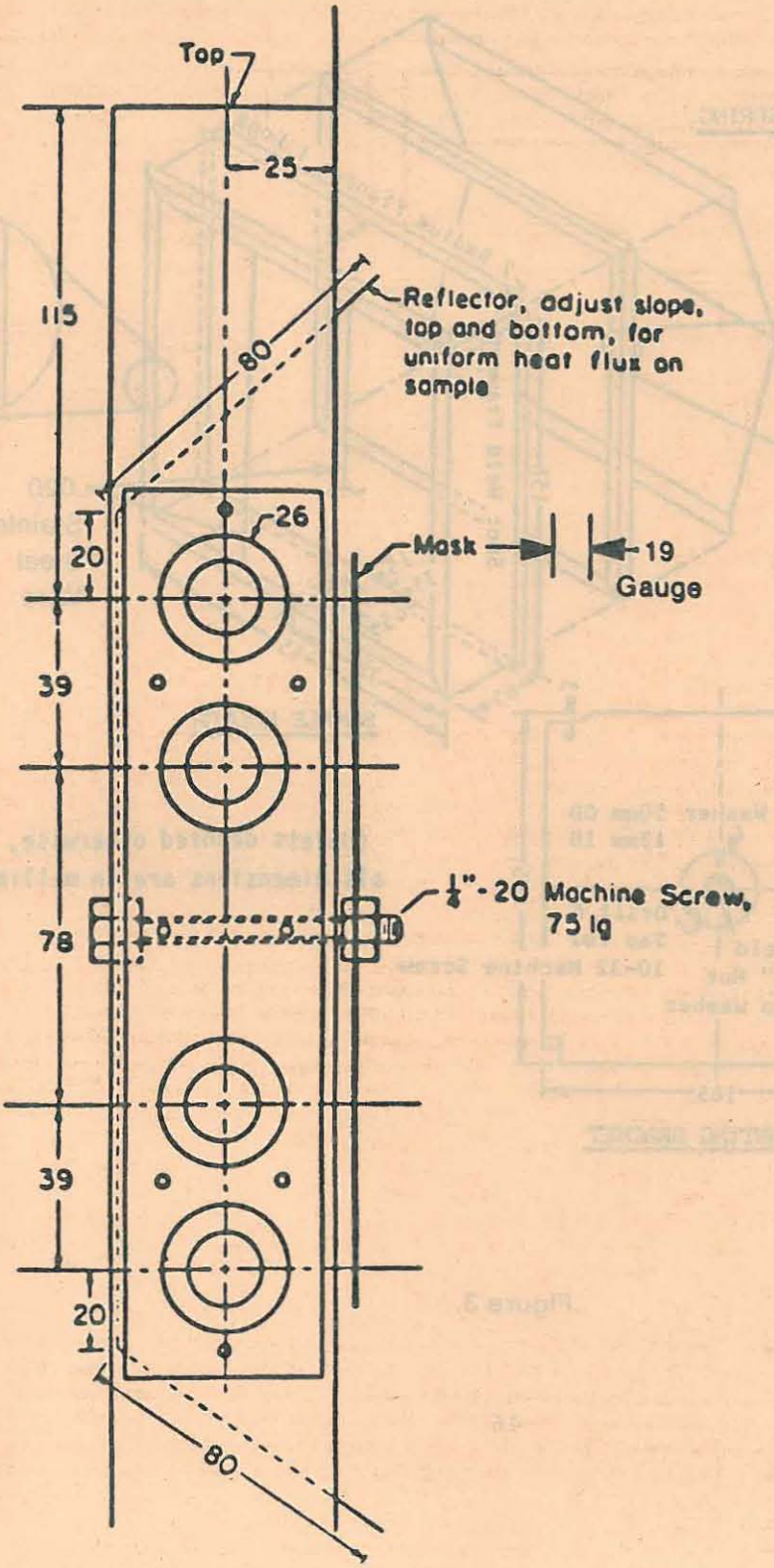

(Unless denoted otherwise all dimensions are in millimeters.)

Figure 2B. "Globar" Radiant Panel

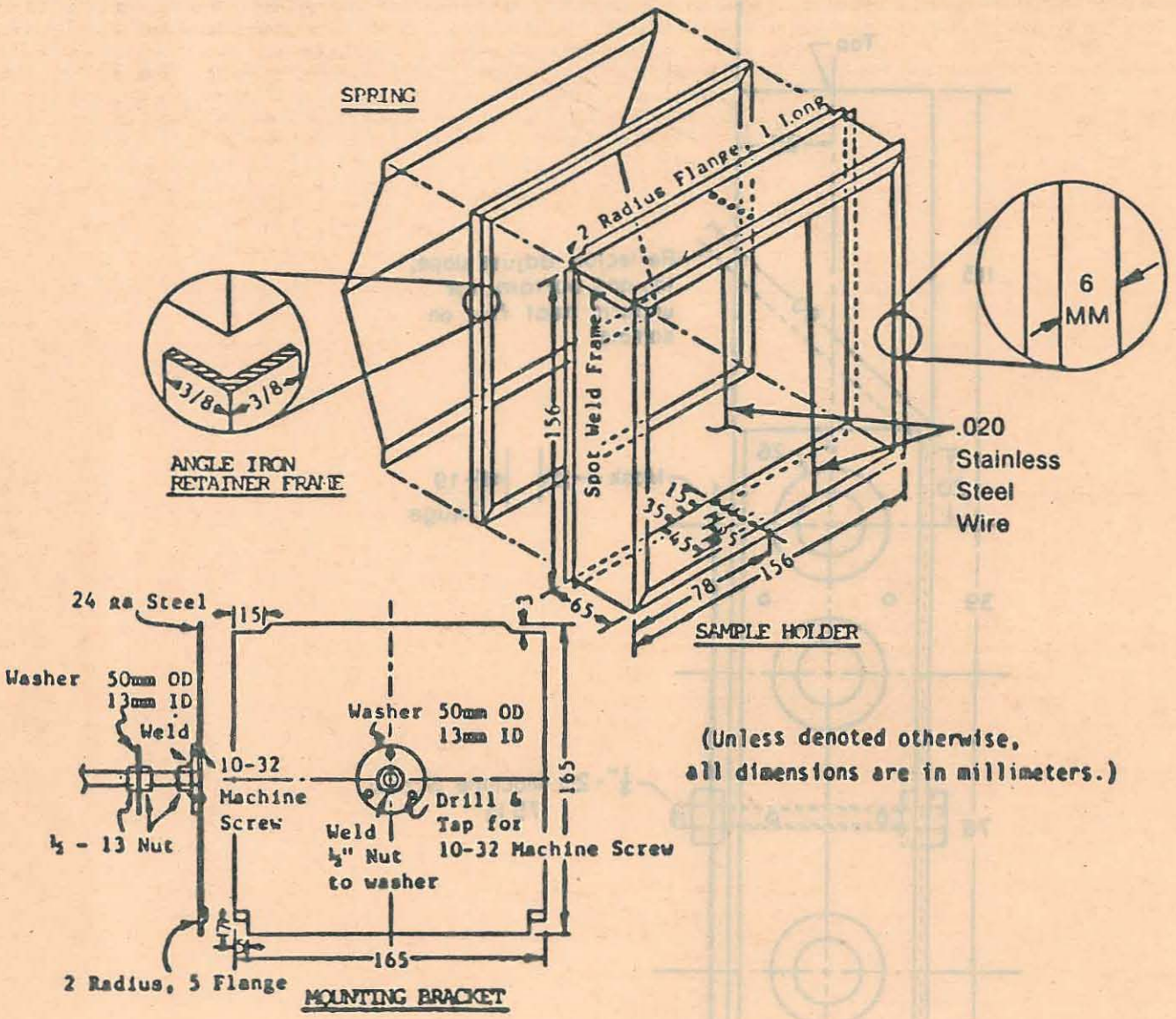
SPRING
2 Radius Flange, 1 Long
6 MM
3/8
3/8
ANGLE IRON RETAINER FRAME
Spot Weld Frame
156
.020 Stainless Steel Wire
15
35
65
5
78
156
65
SAMPLE HOLDER
24 ga Steel
15
3
Washer 50mm OD 13mm ID
Weld
10-32 Machine Screw
½ - 13 Nut
Washer 50mm OD 13mm ID
Weld ½" Nut to washer
Drill & Tap for 10-32 Machine Screw
165
165
2 Radius, 5 Flange
MOUNTING BRACKET
(Unless denoted otherwise, all dimensions are in millimeters.)

Figure 3.

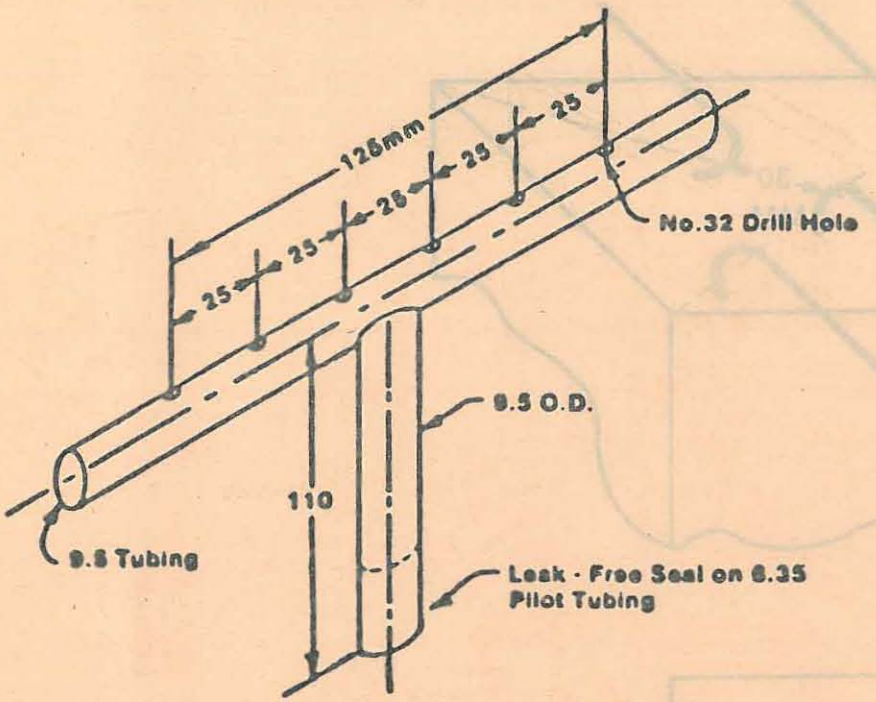

(Unless denoted otherwise, all dimensions are in millimeters.)

Figure 4.

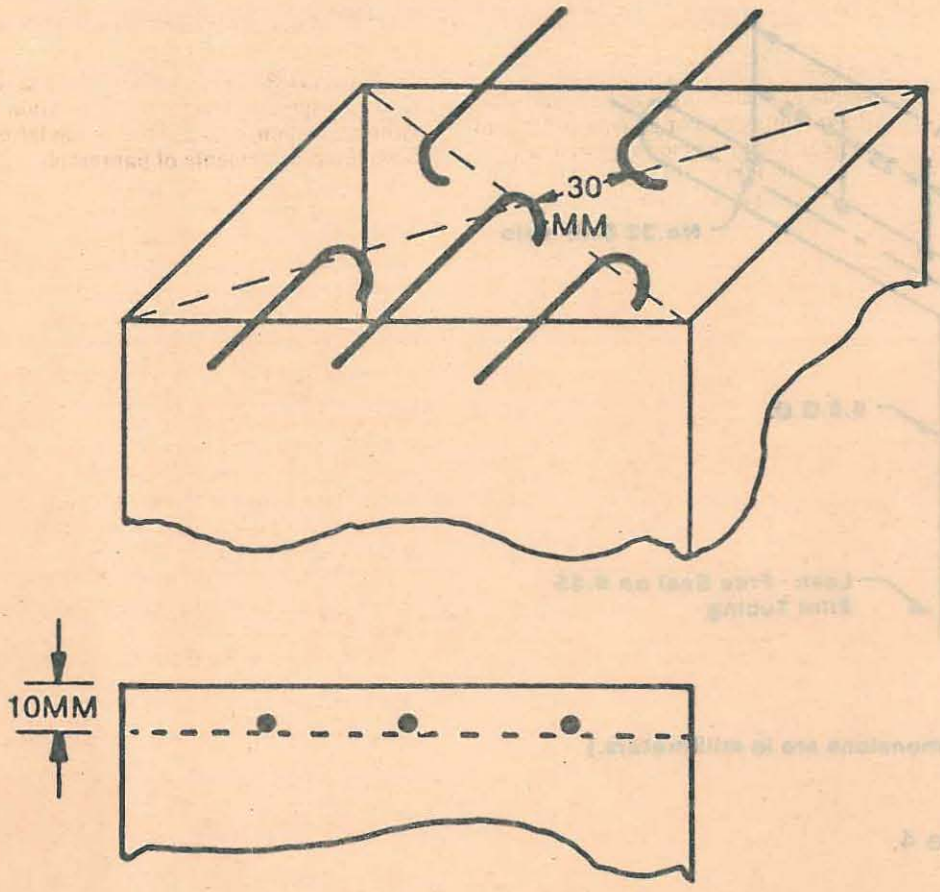

Figure 5. Thermocouple Position

BILLING CODE 4910-13-C

Part V. Test Method to Determine the Smoke Emission Characteristics of Cabin Materials

(a) *Summary of Method.* The specimens must be constructed, conditioned, and tested in the flaming mode in accordance with American Society of Testing and Materials (ASTM) Standard Test Method ASTM F814-83.

(b) *Acceptance Criteria.* The specific optical smoke density (D_s), which is obtained by averaging the reading obtained after 4 minutes with each of the three specimens, shall not exceed 200.

PART 121—CERTIFICATION AND OPERATIONS: DOMESTIC, FLAG, AND SUPPLEMENTAL AIR CARRIERS AND COMMERCIAL OPERATORS OF LARGE AIRCRAFT

4. The authority citation for Part 121 continues to read as follows:

Authority: 49 U.S.C. 1354(a), 1355, 1356, 1357, 1401, 1421-1430, 1472, 1485, and 1502; 49 U.S.C. 106(g) (Revised, Pub. L. 97-449, January 12, 1983) 49 CFR 1.47(a).

5. By amending § 121.312 by revising paragraphs (a)(1), (a)(2), (a)(5), and (a)(6) to read as follows and by adding a new paragraph (a)(7):

§ 121.312 Materials for compartment interiors.

(a) * * *

(1) All airplanes manufactured on or after August 20, 1988, but prior to August 20, 1990, must comply with the heat release rate testing provisions of § 25.853(a-1) in effect on August 20, 1986 or the date of a later amendment thereto, except that the total heat release over the first 2 minutes of sample exposure must not exceed 100 kilowatt minutes per square meter and the peak heat release rate must not exceed 100 kilowatts per square meter.

(2) All airplanes manufactured on or after August 20, 1990, must comply with the heat release rate and smoke testing provisions of § 25.853(a-1) in effect on September 26, 1988.

* * * * *

(5) Upon the first substantially complete replacement of the cabin interior components subject to § 25.853(a-1) on or after August 20, 1988, but prior to August 20, 1990, airplanes type certificated after January 1, 1958, must comply with the heat release rate testing provisions of that paragraph in effect on August 20, 1986, or the date of a later amendment thereto, except that the total heat release over the first 2 minutes of sample exposure shall not exceed 100 kilowatt-minutes per square meter, and the peak heat release rate shall not exceed 100 kilowatts per square meter.

(6) Upon the first substantially complete replacement of the cabin interior components identified in § 25.853(a-1) on or after August 20, 1990, airplanes type certificated after January 1, 1958, must comply with the heat release rate and smoke testing provisions of that paragraph in effect on September 26, 1988.

(7) Contrary provisions of this section notwithstanding, the Manager of the Transport Airplane Directorate, Aircraft Certification Service, Federal Aviation Administration, may authorize deviation from the requirements of paragraph (a)(1), (a)(2), (a)(5), or (a)(6) of this section for specific components of the cabin interior which do not meet applicable flammability and smoke emission requirements, if the determination is made that special circumstances exist that make compliance impractical. Such grants of deviation will be limited to those airplanes manufactured within 1 year after the applicable date specified in this section and those airplanes in which the interior is replaced within 1 year of that date. A request for such grant of deviation must include a thorough and accurate analysis of each component subject to § 25.853(a-1), the steps being taken to achieve compliance, and, for the few components for which timely compliance will not be achieved, credible reasons for such noncompliance.

* * * * *

Issued in Washington, DC, on August 19, 1988.

T. Allan McArtor,

Administrator.

[FR Doc. 88-19283 Filed 8-23-88; 9:58 am]

BILLING CODE 4910-13-M